VERSA-LINE

Submittal

Bare Element "B"
Versa-Line
Copper/Aluminum and
Steel Element Ratings

☐ **Bare Element "B"**

Specification

ELEMENT:

TYPE: ☐ Cu/AL (Mechanically Expanded)
LENGTHS: 2'0" thru 12'6" in 1" Increments for 1" & 1-1/4" Cu.
2'0" to 8'0" in 1" Increments for ¾" Cu.

One End Flared (Std)

See Catalog for Working Pressures

BRACKETS:

☐ Wall Mtd B.B. Hngr

ELEMENT:

TYPE: ☐ IPS Steel (Mechanically Expanded)
LENGTHS: 2'-0" to 12'-6" in 1" Increments
☐ NPT Thread both Ends (Std)
☐ Beveled Ends for Field Weld (Opt'l)

See Catalog for Working Pressures

BRACKETS:

☐ Wall Mtd B.B. Hngr

TUBE SIZE	FIN SIZE HEIGHT x WIDTH	CRADLE NUMBER	A	B
3/4 COPPER	3 5/8 x 4 1/4	2	7 9/16	6 3/4
	4 1/4 x 4 1/4	3A	7 1/4	6"
1" COPPER	3 5/8 x 4 1/4	2	7 9/16	6 9/16
	4 1/4 x 4 1/4		7 1/4	6 1/4
1 1/4 COPPER	3 5/8 x 4 1/4	2	7 9/16	6 7/16
	4 1/4 x 4 1/4		7 1/4	6 1/8
1" STEEL	4 1/4 x 4 1/4	2	7 1/4	6 1/8
1 1/4 STEEL	4 1/4 x 4 1/4	2	7 1/4	5 15/16
2" STEEL	4 1/4 x 4 1/4	1	7 1/4	6 3/16

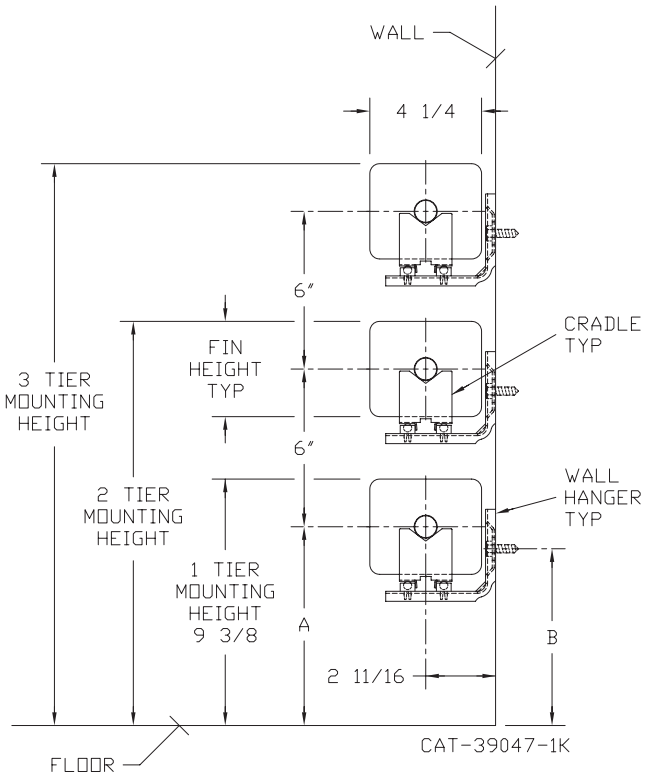

STERLING®
COMMERCIAL HYDRONIC PRODUCTS
260 North Elm St., Westfield, MA 01085
(413) 564-5535 Fax: (413) 562-8437
www.sterlingheat.com

MADE IN THE USA

10/22

PROJECT: _____ **DATE:** _____
LOCATION: _____
ARCHITECT: _____
ENGINEER: _____
CONTRACTOR: _____
PO NUMBER: _____

STYLE "B" BARE ELEMENT

COPPER/ALUMINUM ELEMENTS

ALL RATINGS ARE IN BTU/HR/LIN FT AND BASED ON 3 FPS VELOCITY, 65° EAT

TUBE SIZE	CATALOG DESIGNATION	FIN SIZE HEIGHT X WIDTH	FINS PER FT.	FIN THICKNESS IN INCHES	TIERS AND CENTERS IN INCHES	MOUNTING HEIGHT IN INCHES	STEAM 215° FACTOR	HOT WATER (AVG.) 200°	190°	180°	170°	160°	150°	140°	130°	120°
								CORRECTION FACTORS FOR AVERAGE WATER TEMPERATURES								
							1.00	0.86	0.78	0.69	0.61	0.53	0.45	.40	.33	.26
3/4"	C3/4-433	3-5/8" X 4-1/4"	***32***	***.020***	***1***	***9-3/8***	***1210***	1040	940	830	740	640	540	480	400	310
					2-6 CL	15-3/8	2130	1830	1660	1470	1300	1130	960	850	700	550
					3-6 CL	21-3/8	2880	2480	2250	1990	1760	1530	1300	1150	950	750
3/4"	C3/4-434	3-5/8" X 4-1/4"	***40***	***.020***	***1***	***9-3/8***	***1450***	1250	1130	1000	880	770	650	580	480	380
					2-6 CL	15-3/8	2490	2140	1940	1720	1520	1320	1120	1000	820	650
					3-6 CL	21-3/8	3300	2840	2570	2280	2010	1750	1490	1320	1090	860
3/4"	C3/4-435	3-5/8" X 4-1/4"	***50***	***.020***	***1***	***9-3/8***	***1600***	1380	1250	1100	980	850	720	640	530	420
					2-6 CL	15-3/8	2650	2280	2070	1830	1620	1400	1190	1060	870	690
					3-6 CL	21-3/8	3450	2970	2690	2380	2100	1830	1550	1380	1140	900
1"	C433	3-5/8" X 4-1/4"	***32***	***.020***	***1***	***9-3/8***	***1260***	1080	980	870	770	670	570	500	420	330
					2-6 CL	15-3/8	2220	1910	1730	1530	1350	1180	1000	890	730	580
					3-6 CL	21-3/8	3000	2580	2340	2070	1830	1590	1350	1200	990	780
1"	C434	3-5/8" X 4-1/4"	***40***	***.020***	***1***	***9-3/8***	***1410***	1210	1100	970	860	750	630	560	470	370
					2-6 CL	15-3/8	2420	2080	1890	1670	1480	1280	1090	970	800	630
					3-6 CL	21-3/8	3200	2750	2500	2210	1950	1700	1440	1280	1060	830
1"	C435	3-5/8" X 4-1/4"	***50***	***.020***	***1***	***9-3/8***	***1600***	1380	1250	1100	980	850	720	640	530	420
					2-6 CL	15-3/8	2640	2270	2060	1820	1610	1400	1190	1060	870	690
					3-6 CL	21-3/8	3450	2970	2690	2380	2100	1830	1550	1380	1140	900
1-1/4"	C1433	3-5/8" X 4-1/4"	***32***	***.020***	***1***	***9-3/8***	***1310***	1130	1020	900	800	690	590	520	430	340
					2-6 CL	15-3/8	2310	1990	1800	1590	1410	1220	1040	920	760	600
					3-6 CL	21-3/8	3130	2690	2440	2160	1910	1660	1410	1250	1030	810
1-1/4"	C1434	3-5/8" X 4-1/4"	***40***	***.020***	***1***	***9-3/8***	***1440***	1240	1120	990	880	760	650	580	480	370
					2-6 CL	15-3/8	2470	2120	1930	1700	1510	1310	1110	990	820	640
					3-6 CL	21-3/8	3260	2800	2540	2250	1990	1730	1470	1300	1080	850
1-1/4"	C1435	3-5/8" X 4-1/4"	***50***	***.020***	***1***	***9-3/8***	***1600***	1380	1250	1100	980	850	720	640	530	420
					2-6 CL	15-3/8	2650	2280	2070	1830	1620	1400	1190	1060	870	690
					3-6 CL	21-3/8	3460	2980	2700	2390	2110	1830	1560	1380	1140	900
3/4"	C3/4 43	4-1/4" SQ.	32	.020	1	9-3/8	1340	1150	1050	920	820	710	600	540	440	350
					2-6 CL	15-3/8	2340	2010	1830	1610	1430	1240	1050	940	770	610
					3-6 CL	21-3/8	3200	2750	2500	2210	1950	1700	1440	1280	1060	830
3/4"	C3/4 44	4-1/4" SQ.	40	.020	1	9-3/8	1600	1380	1250	1100	980	850	720	640	530	420
					2-6 CL	15-3/8	2540	2180	1980	1750	1550	1350	1140	1020	840	660
					3-6 CL	21-3/8	3330	2860	2600	2300	2030	1760	1500	1330	1100	870
3/4"	C3/4 45	4-1/4" SQ.	50	.020	1	9-3/8	1650	1420	1290	1140	1010	870	740	660	540	430
					2-6 CL	15-3/8	2620	2250	2040	1810	1600	1390	1180	1050	860	680
					3-6 CL	21-3/8	3430	2950	2680	2370	2090	1820	1540	1370	1130	890
1"	C43	4-1/4" SQ.	***32***	***.020***	***1***	***9-3/8***	***1340***	1150	1050	920	820	710	600	540	440	350
					2-6 CL	15-3/8	2370	2040	1850	1640	1450	1260	1070	950	780	620
					3-6 CL	21-3/8	3230	2780	2520	2230	1970	1710	1450	1290	1070	840
1"	C44	4-1/4" SQ.	***40***	***.020***	***1***	***9-3/8***	***1490***	1280	1160	1030	910	790	670	600	490	390
					2-6 CL	15-3/8	2490	2140	1940	1720	1520	1320	1120	1000	820	650
					3-6 CL	21-3/8	3320	2860	2590	2290	2030	1760	1490	1330	1100	860
1"	C45	4-1/4" SQ.	***50***	***.020***	***1***	***9-3/8***	***1680***	1440	1310	1160	1020	890	760	670	550	440
					2-6 CL	15-3/8	2650	2280	2070	1830	1620	1400	1190	1060	870	690
					3-6 CL	21-3/8	3460	2980	2700	2390	2110	1830	1560	1380	1140	900
1-1/4"	C143	4-1/4" SQ.	***32***	***.020***	***1***	***9-3/8***	***1400***	1200	1090	970	850	740	630	560	460	360
					2-6 CL	15-3/8	2470	2120	1930	1700	1510	1310	1110	990	820	640
					3-6 CL	21-3/8	3360	2890	2620	2320	2050	1780	1510	1340	1110	870
1-1/4"	C144	4-1/4" SQ.	***40***	***.020***	***1***	***9-3/8***	***1660***	1430	1290	1150	1010	880	750	660	550	430
					2-6 CL	***15-3/8***	***2680***	2300	2090	1850	1630	1420	1210	1070	880	700
					3-6 CL	***21-3/8***	***3490***	3000	2720	2410	2130	1850	1570	1400	1150	910
1-1/4"	C145	4-1/4" SQ.	***50***	***.020***	***1***	***9-3/8***	***1710***	1470	1330	1180	1040	910	770	680	560	440
					2-6 CL	***15-3/8***	***2460***	2120	1920	1700	1500	1300	1110	980	810	640
					3-6 CL	***21-3/8***	***3200***	2750	2500	2210	1950	1700	1440	1280	1060	830

Note: Copper tube furnished flared one end standard.

▶ **Bold, italicized units are AHRI CERTIFIED rated** ◀

STYLE "B" BARE ELEMENT

STEEL ELEMENTS

ALL RATINGS ARE IN BTU/HR/LIN FT AND BASED ON 3 FPS VELOCITY, 65° EAT

TUBE SIZE	CATALOG DESIGNATION	FIN SIZE HEIGHT X WIDTH	FINS PER FT.	FIN THICKNESS IN INCHES	TIERS AND CENTERS IN INCHES	MOUNTING HEIGHT IN INCHES	STEAM 215° FACTOR	HOT WATER (AVG.) 200°	190°	180°	170°	160°	150°	140°	130°	120°
								CORRECTION FACTORS FOR AVERAGE WATER TEMPERATURES								
							1.00	0.86	0.78	0.69	0.61	0.53	0.45	.40	.33	.26
1"	S43	4-1/4" SQ.	32	.032	1	9-3/8	1320	1140	1030	910	810	700	590	530	440	340
					2-6 CL	15-3/8	2320	2000	1810	1600	1420	1230	1040	930	770	600
					3-6 CL	21-3/8	3050	2620	2380	2100	1860	1620	1370	1220	1010	790
1"	S44	4-1/4" SQ.	40	.032	1	9-3/8	1490	1280	1160	1030	910	790	670	600	490	390
					2-6 CL	15-3/8	2450	2110	1910	1690	1490	1300	1100	980	810	640
					3-6 CL	21-3/8	3180	2730	2480	2190	1940	1690	1430	1270	1050	830
1"	S45	4-1/4" SQ.	50	.032	1	9-3/8	1580	1360	1230	1090	960	840	710	630	520	410
					2-6 CL	15-3/8	2510	2160	1960	1730	1530	1330	1130	1000	830	650
					3-6 CL	21-3/8	3230	2780	2520	2230	1970	1710	1450	1290	1070	840
1-1/4"	S143	4-1/4" SQ.	32	.032	1	9-3/8	1220	1050	950	840	740	650	550	490	400	320
					2-6 CL	15-3/8	2300	1980	1790	1590	1400	1220	1040	920	760	600
					3-6 CL	21-3/8	3030	2610	2360	2090	1850	1610	1360	1210	1000	790
1-1/4"	S144	4-1/4" SQ.	40	.032	1	9-3/8	1480	1270	1150	1020	900	780	670	590	490	380
					2-6 CL	15-3/8	2440	2100	1900	1680	1490	1290	1100	980	810	630
					3-6 CL	21-3/8	3170	2730	2470	2190	1930	1680	1430	1270	1050	820
1-1/4"	S145	4-1/4" SQ.	50	.032	1	9-3/8	1550	1330	1210	1070	950	820	700	620	510	400
					2-6 CL	15-3/8	2460	2120	1920	1700	1500	1300	1110	980	810	640
					3-6 CL	21-3/8	3200	2750	2500	2210	1950	1700	1440	1280	1060	830
2"	S242	4-1/4" SQ.	25	.032	1	9-3/8	1140	980	890	790	700	600	510	460	380	300
					2-6 CL	15-3/8	2030	1750	1580	1400	1240	1080	910	810	670	530
					3-6 CL	21-3/8	2700	2320	2110	1860	1650	1430	1220	1080	890	700
2"	S243	4-1/4" SQ.	32	.032	1	9-3/8	1320	1140	1030	910	810	700	590	530	440	340
					2-6 CL	15-3/8	2230	1920	1740	1540	1360	1180	1000	890	740	580
					3-6 CL	21-3/8	2910	2500	2270	2010	1780	1540	1310	1160	960	760
2"	S244	4-1/4" SQ.	40	.032	1	9-3/8	1490	1280	1160	1030	910	790	670	600	490	390
					2-6 CL	15-3/8	2360	2030	1840	1630	1440	1250	1060	940	780	610
					3-6 CL	21-3/8	3040	2610	2370	2100	1850	1610	1370	1220	1000	790

Notes: 1) Steel fins furnished as .032 thick, painted black.
2) NPT threads furnished on steel elements. Please use domestic fittings for proper installation.
3) The ends can be provided chamfered for field welded fittings when specified.

Design Data

COMMERCIAL FINNED TUBE CHARTS FOR RATING CORRECTIONS

For assistance with ratings and selection, please use our online Specifier.

CORRECTION FACTORS FOR WATER TEMPERATURES AND AIR TEMPERATURES OTHER THAN STANDARD

AVERAGE WATER TEMP. °F	ENTERING AIR TEMPERATURE °F														
	45	55	STD 65	70	75	80	85	90	95	100	110	120	130	140	150
90	.19	.13	.11	.06											
100	.25	.19	.15	.11	.08	.06									
110	.31	.25	.20	.16	.13	.11	.08	.06							
120	.38	.31	.26	.21	.19	.16	.13	.11	.08	.06					
130	.45	.38	.33	.28	.25	.21	.19	.16	.13	.11	.06				
140	.53	.45	.40	.34	.31	.28	.25	.21	.19	.16	.11	.06			
150	.61	.53	.45	.41	.38	.34	.31	.28	.25	.21	.16	.11	.06		
160	.69	.61	.53	.49	.45	.41	.38	.34	.31	.28	.21	.16	.11	.06	
170	.77	.69	.61	.57	.53	.49	.45	.41	.38	.34	.28	.21	.16	.11	.06
180	.86	.77	.69	.65	.61	.57	.53	.49	.45	.41	.34	.28	.21	.16	.11
190	.95	.86	.78	.73	.69	.65	.61	.57	.53	.49	.41	.34	.28	.21	.16
200	1.05	.95	.86	.82	.77	.73	.69	.65	.61	.57	.49	.41	.34	.28	.21
210	1.14	1.05	.95	.91	.86	.82	.77	.73	.69	.65	.57	.49	.41	.34	.28
▶ 215 (STD.)	1.19	1.09	1.00	.95	.91	.86	.82	.77	.73	.69	.61	.53	.45	.38	.31
220	1.24	1.14	1.05	1.00	.95	.91	.86	.82	.77	.73	.65	.57	.49	.41	.34
230	1.34	1.24	1.14	1.09	1.05	1.00	.95	.91	.86	.82	.73	.65	.57	.49	.41
240	1.44	1.34	1.25	1.19	1.14	1.09	1.05	1.00	.95	.91	.82	.73	.65	.57	.49
250	1.55	1.44	1.34	1.29	1.24	1.19	1.14	1.09	1.05	1.00	.91	.82	.73	.65	.57
260	1.66	1.55	1.44	1.39	1.34	1.29	1.24	1.19	1.14	1.09	1.00	.91	.82	.73	.65
270	1.76	1.66	1.55	1.50	1.44	1.39	1.34	1.29	1.24	1.19	1.09	1.00	.91	.82	.73
280	1.87	1.76	1.66	1.60	1.55	1.50	1.44	1.39	1.34	1.29	1.19	1.09	1.00	.91	.82
290	1.99	1.87	1.76	1.71	1.66	1.60	1.55	1.50	1.44	1.39	1.29	1.19	1.09	1.00	.91
300	2.10	1.99	1.87	1.82	1.76	1.71	1.66	1.60	1.55	1.50	1.39	1.29	1.19	1.09	1.00

CORRECTION FACTORS FOR STEAM PRESSURES AND AIR TEMPERATURES OTHER THAN STANDARD

STEAM PRESSURE		ENTERING AIR TEMPERATURE °F														
GAUGE	ABS. PSI	TEMP. °F	45	55	STD 65	70	75	80	85	90	100	110	120	130	140	150
(VAC) 15" HG	7.32	178.9	0.90	0.80	0.70	0.65	0.60	0.56	0.51	0.45	0.39	0.32	0.25	0.18	0.13	0.08
(VAC) 10"	9.78	192.2	1.02	0.91	0.81	0.76	0.71	0.66	0.62	0.55	0.48	0.40	0.33	0.26	0.20	0.14
(VAC) 5"	12.25	202.9	1.11	1.00	0.90	0.85	0.79	0.75	0.70	0.63	0.56	0.48	0.40	0.33	0.27	0.20
0 PSI	14.696	212.0	1.19	1.09	0.97	0.92	0.87	0.82	0.77	0.70	0.63	0.54	0.46	0.38	0.31	0.25
▶ .899	15.595	215.0	1.22	1.11	1.00	0.95	0.90	0.84	0.80	0.75	0.65	0.57	0.48	0.40	0.33	0.26
5	19.70	227.1	1.34	1.22	1.11	1.05	1.00	0.95	0.90	0.81	0.75	0.66	0.57	0.49	0.41	0.34
10	24.70	239.4	1.45	1.33	1.22	1.17	1.11	1.05	1.00	0.91	0.85	0.75	0.66	0.58	0.50	0.42
15	29.70	249.8	1.55	1.43	1.31	1.26	1.20	1.14	1.09	1.00	0.94	0.84	0.75	0.66	0.57	0.49
20	34.70	258.5	1.63	1.52	1.40	1.33	1.28	1.23	1.17	1.07	1.02	0.92	0.82	0.73	0.64	0.55
25	39.70	266.8	1.71	1.59	1.47	1.41	1.36	1.30	1.25	1.15	1.09	0.98	0.89	0.80	0.71	0.62
30	44.70	274.0	1.78	1.66	1.54	1.48	1.42	1.37	1.31	1.21	1.15	1.05	0.95	0.85	0.76	0.68
40	54.70	286.7	1.91	1.79	1.66	1.61	1.54	1.49	1.43	1.32	1.27	1.16	1.06	0.97	0.87	0.78
50	64.70	297.7	2.02	1.90	1.77	1.71	1.65	1.60	1.54	1.42	1.37	1.26	1.16	1.06	0.96	0.87
60	74.70	307.3	2.10	2.00	1.87	1.81	1.75	1.69	1.63	1.51	1.47	1.35	1.25	1.15	1.05	0.95
70	84.70	316.0	2.20	2.09	1.95	1.89	1.83	1.77	1.71	1.59	1.55	1.44	1.33	1.23	1.12	1.03
80	94.70	323.9	2.27	2.17	2.03	1.97	1.91	1.85	1.80	1.69	1.63	1.52	1.41	1.31	1.20	1.10
90	104.70	331.2	2.36	2.24	2.11	2.05	1.98	1.93	1.87	1.74	1.70	1.59	1.48	1.38	1.28	1.17
100	114.70	337.9	2.43	2.31	2.18	2.11	2.05	2.00	1.94	1.81	1.77	1.65	1.54	1.44	1.33	1.23
125	139.70	352.9	2.59	2.47	2.33	2.27	2.21	2.16	2.10	1.96	1.92	1.80	1.69	1.59	1.48	1.38
150	164.70	365.9	2.73	2.62	2.47	2.43	2.35	2.29	2.23	2.08	2.05	1.94	1.82	1.72	1.61	1.51
175	189.70	377.4	2.86	2.74	2.60	2.54	2.47	2.41	2.35	2.21	2.17	2.05	1.95	1.85	1.73	1.63
200	214.70	387.8	2.95	2.85	2.71	2.63	2.58	2.52	2.47	2.31	2.29	2.17	2.06	1.96	1.84	1.75

From Keenan and Keyes — Linear Interpolation. NOTE: Gauge pressure should be corrected for altitude.

Rate of pitch for steam ½"drop over 20-foot run.

Design Data

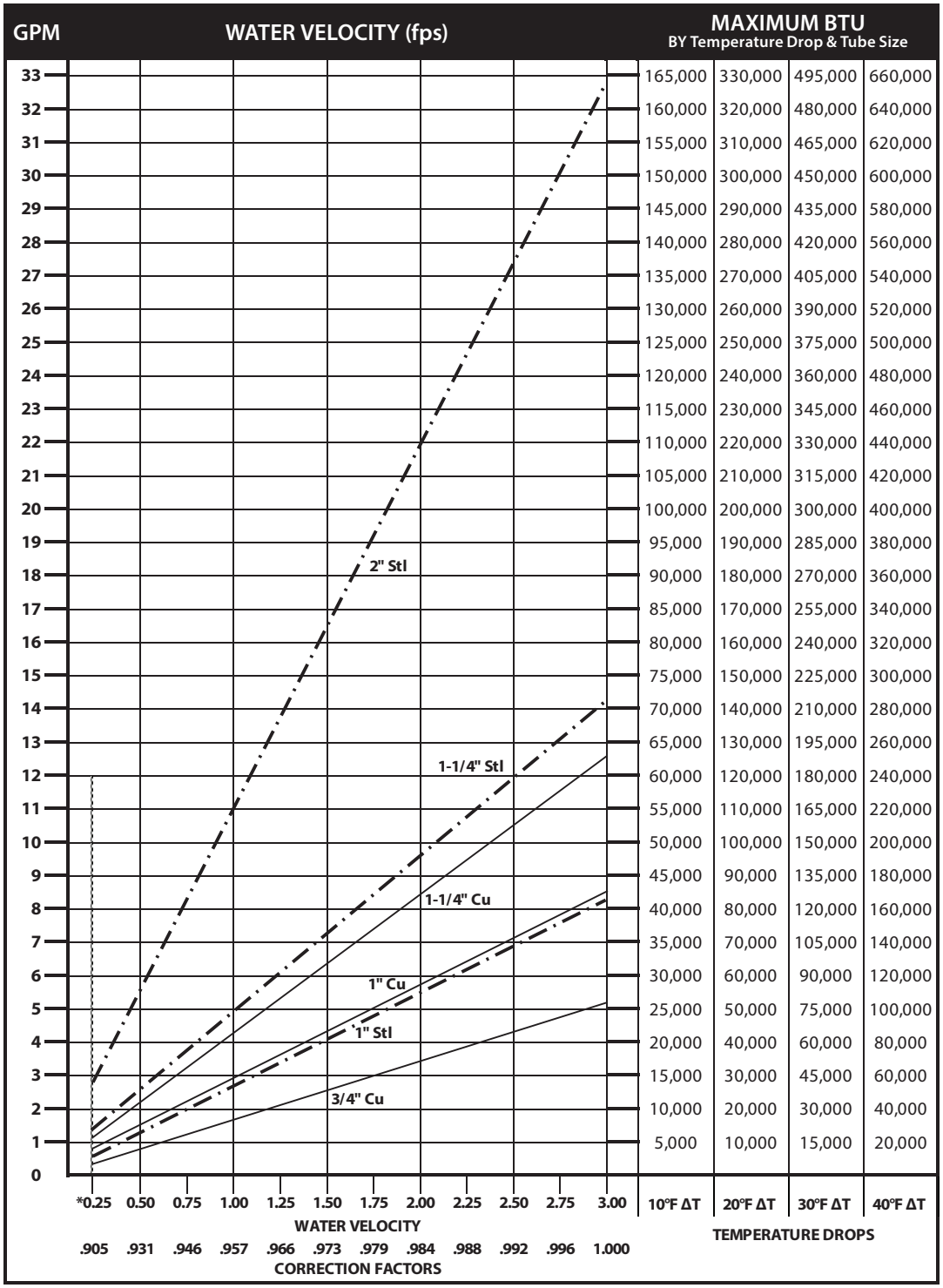

*Do not design below .25 fps.

DYNAMIC FORMULAS

BTU = GPM x 500 x TD

$$GPM = \left(\frac{BTU}{500}\right) \div TD$$

$$TD = \left(\frac{BTU}{500}\right) \div GPM$$

Pressure Drop at Given Water Velocities (Feet of Water per 100 ft. of pipe) based on Hazen - Williams calculation

Nominal Pipe Size	Water Velocity (ft/sec)											
	0.25	0.50	0.75	1.00	1.25	1.50	1.75	2.00	2.25	2.50	2.75	3.00
3/4" Copper	0.06	0.20	0.42	0.72	1.09	1.53	2.04	2.61	3.25	3.95	4.71	5.53
1" Copper	0.04	0.15	0.32	0.54	0.81	1.14	1.52	1.94	2.42	2.94	3.50	4.11
1 1/4" Copper	0.03	0.12	0.25	0.43	0.64	0.90	1.20	1.54	1.92	2.33	2.78	3.26
1" Steel	0.04	0.15	0.32	0.54	0.81	1.14	1.52	1.95	2.42	2.94	3.51	4.12
1 1/4" Steel	0.03	0.11	0.23	0.40	0.60	0.84	1.12	1.44	1.79	2.17	2.59	3.05
2" Steel	0.02	0.07	0.14	0.25	0.37	0.52	0.69	0.89	1.10	1.34	1.60	1.88

Design Data

GUARANTEED WORKING PRESSURES

1" IPS — 780 at Temperatures up to 650˚F.
1-1/4" IPS — 660 at Temperatures up to 650˚F.
2" IPS — 405 at Temperatures up to 650˚F.
1-1/4" CU — 194 at Temperatures up to 300˚F.
1" CU 204 at Temperatures up to 300˚F.
3/4" CU 218 PSI at Temperatures up to 300˚F.

MAXIMUM PRESSURES AT OTHER TEMPERATURES ARE AVAILABLE UPON REQUEST.

Pipe Water Capacities and Quantities Circulated at Velocity of 3 Feet Per Second

Nominal Pipe Size	Pipe I.D. (inches)	Gals Per Lin. Ft.	GPM @ 3' per sec Velocity
3/4" Copper	0.835	0.028	5.12
1" Copper	1.077	0.047	8.52
1 1/4" Copper	1.315	0.071	12.70
1" Steel	1.075	0.047	8.49
1 1/4" Steel	1.395	0.079	14.29
2" Steel	2.115	0.183	32.85

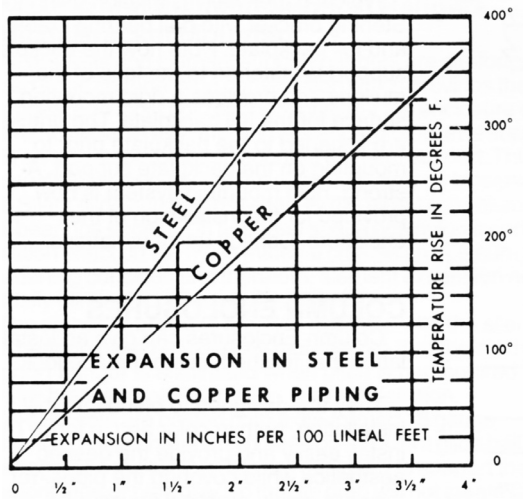

Glycol Correction Factors

Fluid Temperature 200°F

% Solution	Ethylene Glycol	Propylene Glycol
20	.952	.988
30	.921	.968
40	.888	.943
50	.852	.912

Fluid Temperature 180°F

% Solution	Ethylene Glycol	Propylene Glycol
20	.946	.982
30	.913	.961
40	.879	.934
50	.842	.902

Fluid Temperature 140°F

% Solution	Ethylene Glycol	Propylene Glycol
20	.934	.97
30	.898	.946
40	.861	.916
50	.821	.881

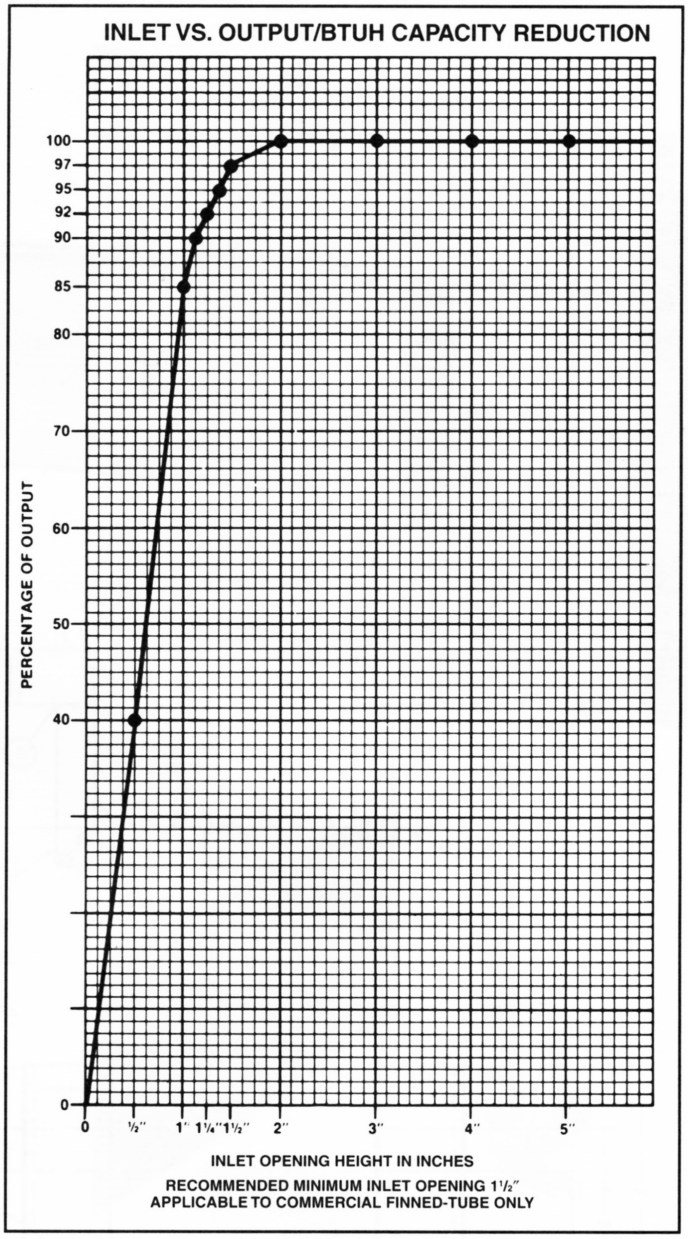

ALTITUDE FACTORS

Approximate factors for convective heat value at varying altitudes

Altitude	Ferrous Units	Copper Alum. Units
Sea Level	1.000	1,000
1,000 ft.	.984	.969
2,000 ft.	.968	.938
3,000 ft.	.952	.908
4,000 ft.	.936	.878
5,000 ft.	.920	.850
6,000 ft.	.904	.822
7,000 ft.	.889	.795
8,000 ft.	.874	.768
9,000 ft.	.859	.743
10,000 ft.	.844	.718
15,000 ft.	.771	.603
20,000 ft.	.703	.502